Plans for Kiosk

We have built two small kiosks for the Finger Lakes Land Trust. The kiosks are designed to be low-cost, attractive (in a natural/rustic fashion), functional, long-lasting, and maintenance-free. We also wanted to avoid the use of pressure-treated lumber and manufactured materials to the greatest extent possible so that the kiosks would fit more comfortably in a natural setting. We believe that we have accomplished most of these objectives; time will tell on the "long-lasting, and maintenance-free."

The kiosk on the FLT at Sweedler Preserve at Lick Brook

The kiosk at Kingsbury Woods Nature Preserve

© Copyright, 2010, Finger Lakes Land Trust and Roger A. Hopkins

Kingsbury kiosk with trailhead register box

Black locust?

We decided to build the kiosks using rough-cut black locust lumber. This helped us meet the objectives of a natural, rustic appearance, and avoidance of pressure-treated lumber. Black locust is naturally rot-resistant. (We still find split black locust fence posts from the late 19th century along the Finger Lakes Trail!)

It may be difficult to find black locust cut to the dimensions you need. You will need to hand select virtually every piece since knots, cavities, and irregular dimensions are common. It is fairly easy to work when it is not well seasoned, but once seasoned, it is extremely hard. You must use carbide cutting tools. You must also pre-drill full length holes for your screws and use soap on the threads to avoid breaking them off. Also, black locust is prone to warping and splitting as it seasons, so it is important that you assemble a structurally sound kiosk with accurate cuts so the pieces mate well. A final treat is that slivers from rough-cut black locust are quite nasty, and some have reported allergic reaction to the fine sawdust. Not to sound too negative, once you have gotten used to working with black locust, you will find it a beautiful wood capable of giving very satisfying results.

© Copyright, 2010, Finger Lakes Land Trust and Roger A. Hopkins

The project

There are three phases to the project.

Selecting the wood

Plan on spending several hours at the sawmill, and probably more than one trip. Make sure that you have gloves, a measuring tape, these plans, and a notebook. Black locust is heavy so don't plan on using a roof rack for all of the lumber in one trip.

Pre-fabrication

This involves building the leg assemblies and precutting all of the pieces except the panel brackets (which should be squared on one end and then cut to length during construction). You will want to do this in your shop and will need an accurate miter saw, power drill and appropriate bits. Mark pieces that are fitted together so they can be matched up during construction. Plan on spending 4-6 hours in the shop.

Construction

You will need at least one helper and preferably 2 or 3. Construction will probably take a full day. If the holes and alignment go slowly, you may need part of a second day to finish.

Here is the general order of business:

1. Dig two holes. We try to keep the holes as small as possible using the undisturbed soil around the holes for support and minimizing the amount of concrete or other fill. But don't have the holes so small that you have trouble with alignment. Remember that you may have to move the bottom of the leg as well as the top.
2. Align the legs
3. Attach the ridge beam and the horizontal panel brackets to the legs
4. Fill in the holes
5. Lunch
6. Attach rafter supports and working rafters to legs and ridge beam
7. Attach bottom roof boards front and back
8. Attach next two roof boards front and back
9. Attach the lazy rafters to the ridge beam and the three roof boards front and back
10. Attach the fourth roof boards front and back, then the ridge cap
11. Finish the panel
12. Finish the ground clean-up

Here is what you will need at the site:

- Two six foot step ladders
- 5′ Rock bar
- Wrecking bar or pry bar
- Post-hole digger
- Shovel

© Copyright, 2010, Finger Lakes Land Trust and Roger A. Hopkins

- Pulaski or similar for light landscaping
- Loppers for cutting roots in the holes
- Rake
- 4-foot carpenter's level
- Measuring tapes
- Carpenter's square or other squaring tool
- Markers and pencils
- Three or four 1″× 3″× 12′ furring strips for braces
- Two 1″× 3″× 5′ furring strips for braces while aligning the legs
- Several blocks, for example 1″× 4″× 6″
- Four 24″ iron stakes
- Hand sledgehammer, for driving stakes and nudging the alignment
- Claw hammer or framing hammer
- Clamps
- More clamps
- Strong battery powered drill, drill bits, screw driver bits, and extra batteries. You will want two drills for doing the roof, one with a drill bit and one with a screwdriver bit. You can pass them back and forth to two workers.
- Some way to keep the fasteners organized
- ⅜″ Drill bit or auger for the carriage bolts.
- ⅞″Spade bit for countersinking the carriage bolts
- Socket wrenches for carriage bolts
- Water for the concrete
- Gloves for all hands
- Plans, notebook, camera
- Optional: Two sawhorses and table top of some sort to keep tools and materials off the ground

© Copyright, 2010, Finger Lakes Land Trust and Roger A. Hopkins

In the shop

The legs

The legs are made from girders fabricated (in your shop) from 2 x 4, 2 x 6, and 5/16 x 5” lag bolts or structural screws. This construction will be almost as stiff as a 6 x 6 without the additional weight or board foot cost. Also, the two pieces will work together to prevent warping in the other piece. Finally, the cutouts for the ridge beam and the rafters are much easier. (Note that these cutouts are done before the pieces are screwed together.)

The holes for the screws need to be pre-drilled, especially if the wood is seasoned. Measure and lay out the location of the screws carefully so that you end up with a nice clean appearance. If using lag screws, first drill a 7/8″ diameter countersink hole about the depth of the screw head. Then drill a pilot hole about 1/16 smaller than the screw. If using structural screws, it may not be necessary to countersink the heads. You will probably have to clamp the pieces together to get them to line up since the pieces will undoubtedly have some curvature. Once clamped, drill all of the holes and put in the screws before loosening the clamps.

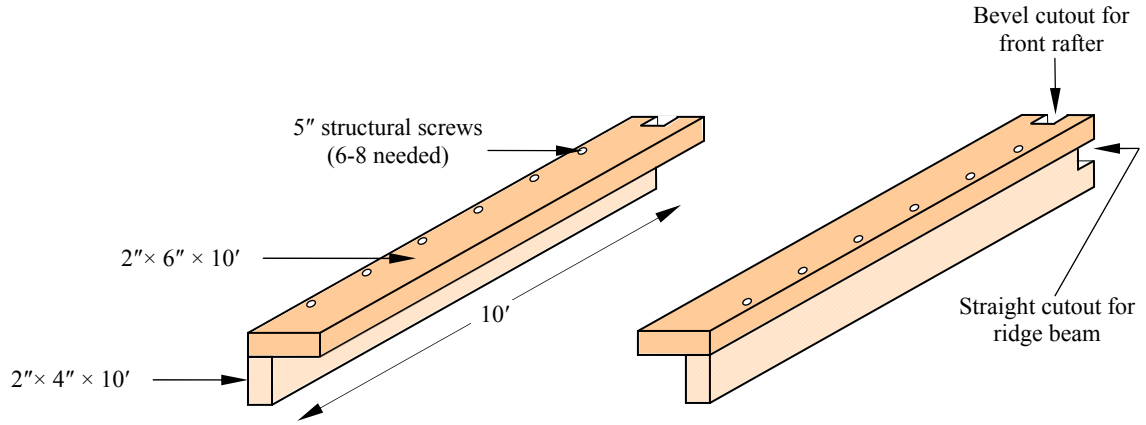

Make cutouts in the tops of the 2 x 4 leg pieces to receive the ridge beam. These are easy to make with two cuts. The cutout should be 2″ deep with the width equal to the thickness of the ridge pole (2″ if using rough-cut). Measure the width carefully so that the ridge beam will fit snugly, but not too tight that you will have trouble at assembly time.

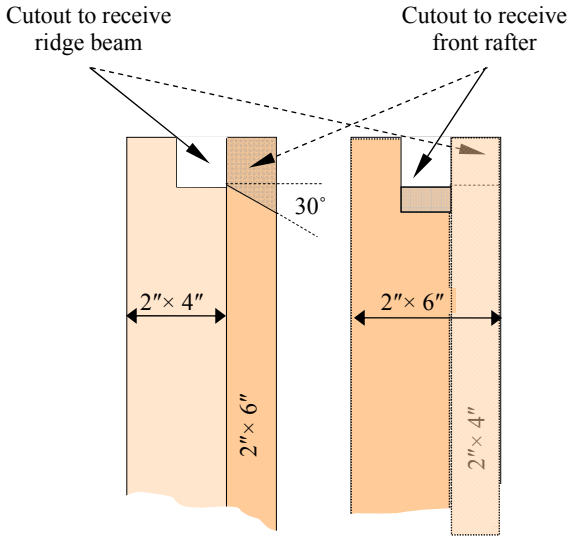

Make cutouts in the tops of the 2 x 6 leg pieces to receive the front rafters. These are more difficult since this is a blind cut and because of the bevel. The width of the cutout should equal the thickness of the rafters. If the rafters are of varying thicknesses, pick two and measure the cutouts carefully. Then mark the rafters so they stay matched up with the cutouts.

© Copyright, 2010, Finger Lakes Land Trust and Roger A. Hopkins

As you make the cutouts, remember that the left and right legs are different. The drawing above shows both legs. Pick the best sides (visually) of the leg pieces to face front and to the sides.

The rafter supports

Cut the two rafter supports. Start with a 44″ section of 2 x 4 and cut the top bevels at 30˚. The bottom bevels are cosmetic but should be about 15˚.

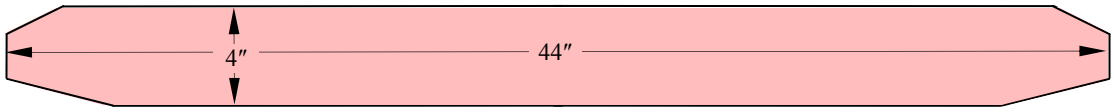

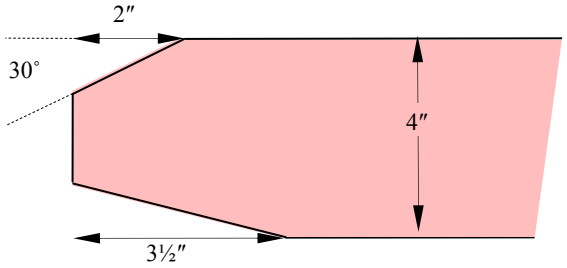

© Copyright, 2010, Finger Lakes Land Trust and Roger A. Hopkins

The rafters

Cut the four working rafters that will connect from the Ridge to the rafter supports. Start with a 24″ section of 2 x 4. Layout the angles at the top of the rafter and cut them with a miter saw. Use the rafter support (shown in red below) as a template to layout the angles at the bottom of the rafter and then cut them with a miter saw.

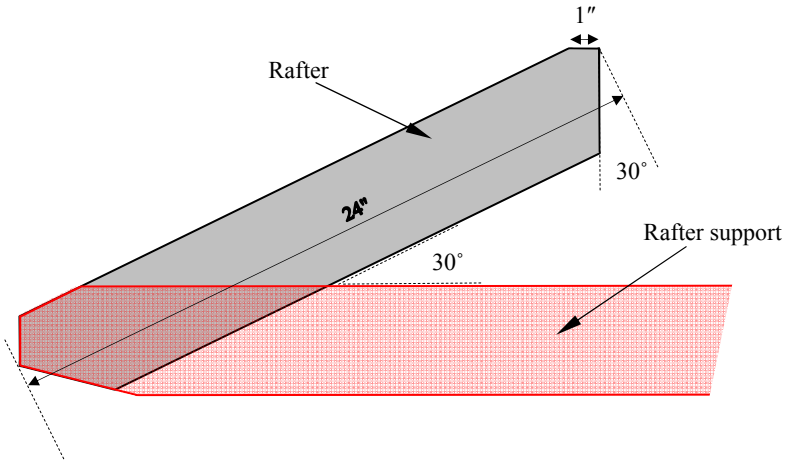

Next cut four spacer pieces from 1′ sections of 2 x 4 as shown in yellow below. These are needed since the rafter support is on the outside of the leg, but the rafters are on the inside of the 2 x 4 section of the leg. Use the rafter as a template to lay out the angles and then cut on a miter saw. You may find it easier to cut the angles on the end of a longer piece and then use a simple crosscut to cut the spacers to length. The actual length is not too important but should be the same for all four.

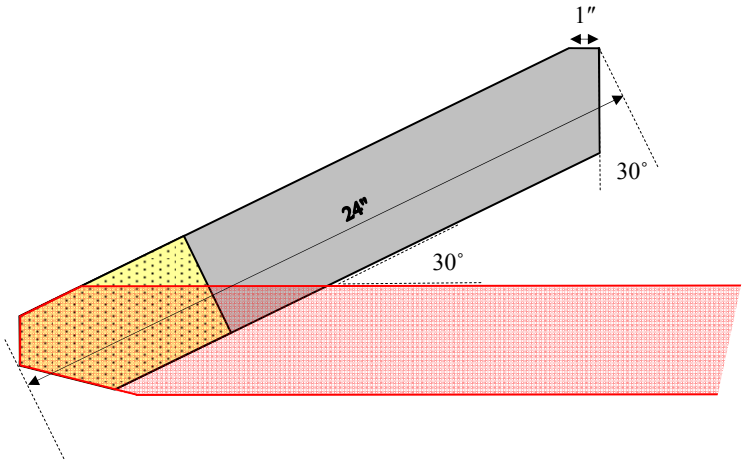

© Copyright, 2010, Finger Lakes Land Trust and Roger A. Hopkins

Aligning the rafters

To check the alignment, lay two rafters on the floor with a piece of 2″× 4″ standing on edge between them (green below) to simulate the ridge beam. This 2″× 4″ should be the same thickness as the actual ridge beam. Then lay the rafter support across as shown below in red. The 44″ width of the rafter support was based on the ridge beam being exactly 2″ thick. If you have a different thickness, or much variation in your rafters or your angles, you may have to trim the angled ends of the rafter support slightly. This is a lot easier to do now than during construction.

You should do this for both ends of the kiosk. If there is much variation in your rafters, mark them once you have them fitted so you can match them up during assembly.

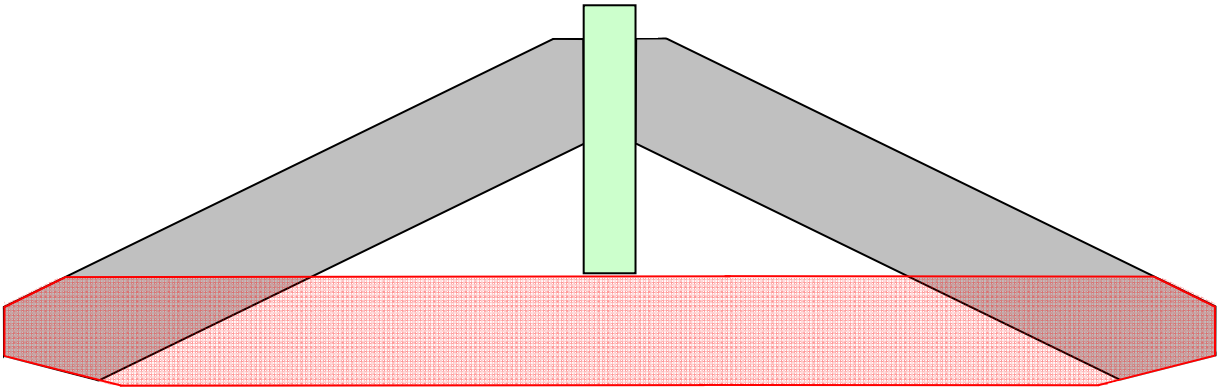

"Lazy" rafters

Cut the remaining six "lazy" rafters in the same way that you cut the 4 working ones. The only difference is that you might consider using lighter weight 2″× 4″ stock. For example, if you find some that are closer to 1½″× 3″ inches, they will work just fine. Their only purpose is to hold the roof boards together; they are not supporting any weight. In fact, they are adding to the weight being supported by the roof boards. Also, the spacers are not needed.

Roof cap

Consider cutting drain grooves the length of the roof cap piece as shown to prevent rain water from siphoning back under the roof cap.

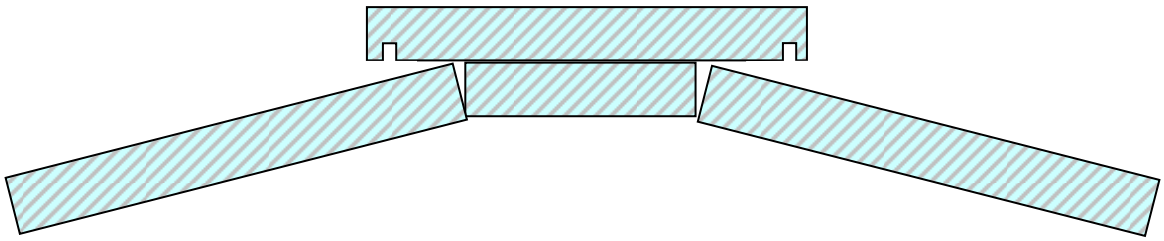

© Copyright, 2010, Finger Lakes Land Trust and Roger A. Hopkins

The display panel

The display panel has overall dimensions of 48″ wide and 36″ high. It is made from a sandwich of ½″ MDO plywood, ½″ Homosote Corkboard, and ⅛″ clear Lexan.

Both the MDO and the Corkboard are a full 48″× 36″ inches and can be cut from a 4′× 8′ sheet. Since both are rather expensive, cut carefully. This will give you material for two kiosks with factory cut sides and leave enough left over for a display panel of 4′ by slightly less than 2′. The factory cut sides on the 48″× 36″ are very useful for squaring up the legs and the panel brackets.

The Lexan should be ordered cut to size and will be approximately 45½″× 33½″ to allow a 1¼″ margin on all four sides for the frame. It is best to build the frame first and then measure the exact dimensions for the Lexan. Remember that you need allow a bit more than ⅛″ for horizontal and vertical expansion. So for example, if your frame measures exactly 45½″ wide, order the Lexan 45⅜″ wide.

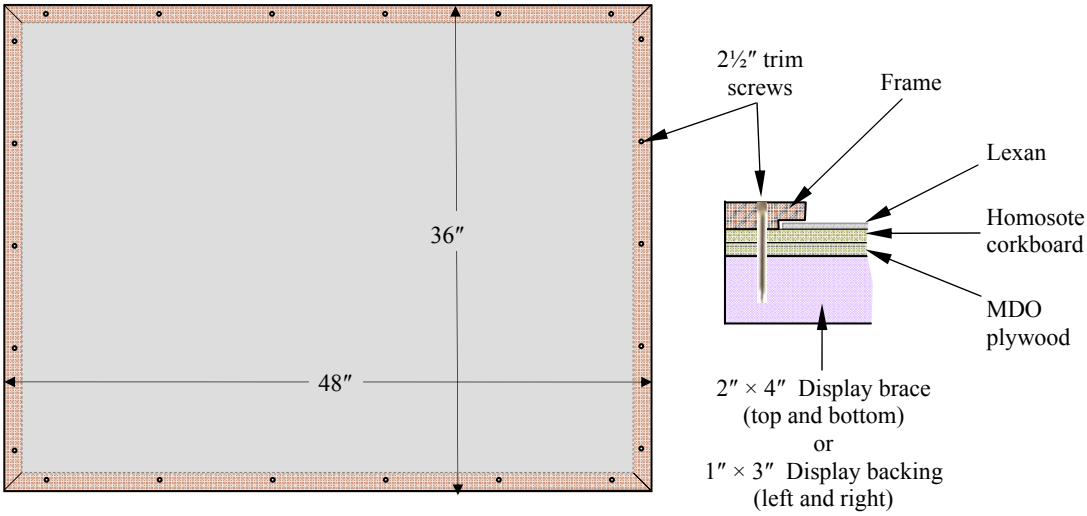

Display panel frame

Make the display panel frame from nice straight pieces of 1″ x 2″ black locust. You will need two 36″ pieces and two 48″ pieces. Rip both sides to get a width of 1½″. Then resaw the top and bottom to get a thickness of ¾″.

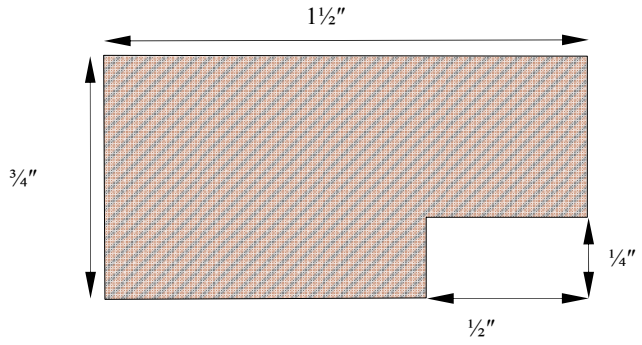

Cut rabbet groves along one side of the pieces ½″ wide and ¼″ deep as shown below. Cut 45˚ miters on the corners to fit to a frame measuring 36″× 48″.

© Copyright, 2010, Finger Lakes Land Trust and Roger A. Hopkins

Display panel brackets

There are horizontal brackets at the top and bottom of the display. These are made from two 2″ × 4″ × 56″ pieces. They should be fairly straight, but can have imperfections on the back side or edges. Cut them a bit long and then trim to exact fit during construction.

You will attach the horizontal brackets to the back of the legs inside the 2″ x 4″ side members of the legs. Use four 3½″ deck screws. Use the MDO Plywood panel as a square to make sure that the legs are parallel, vertical, and exactly four feet apart measured from the inside edges of the 2″× 6″ members. Then trim the horizontal brackets to length and clamp along the top and bottom of the MDO panel. Then drive the screws in the four corners from the back of the kiosk. Note that the horizontal brackets are somewhat structural in addition to supporting the display panel.

The vertical brackets serve only to provide an attachment point for the sides of the display panel. These are made from 1″ × 6″ × 28″ boards. Cut the boards a bit long and then trim to exact fit during construction.

You will attach the vertical brackets to the back of the legs between the two horizontal brackets. Use 4 or more 2½″ deck screws driving them from the back of the kiosk.

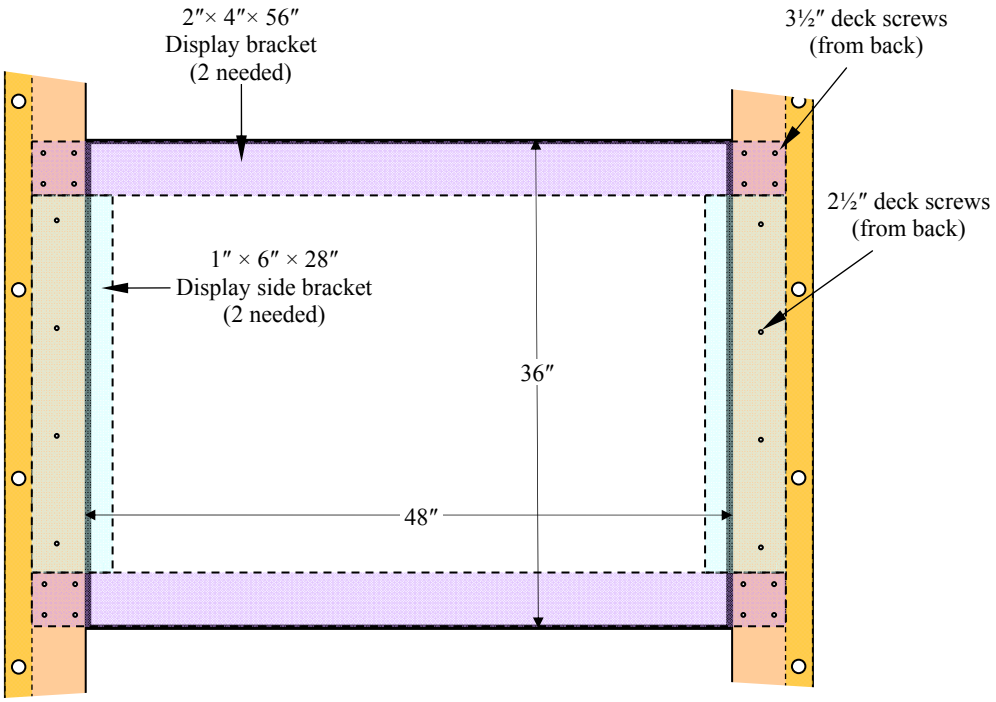

© Copyright, 2010, Finger Lakes Land Trust and Roger A. Hopkins

On the site

Aligning the structure

The main challenge in building the kiosk is getting the two legs vertical, parallel, and exactly 4′ apart as measured from the inside edges of the legs. Additional complications are that the tops of both legs need to be at the same level, and the fronts of the two legs need to be in the same plane (in other words, not twisted with respect to each other).

We have had the best luck with the following sequence:

1. First, try to get bottom of both holes at approximately the same level. Do this by leveling a board between the two holes and then measuring from the board to the bottom of each hole. If you find a slight difference, work with the less deep hole since the other one can be filled in slightly. This will be the first leg. If there is a difference of more than a few inches (for example, you hit bedrock), then work with the deeper hole, planning to cut the bottom off of the other leg. (If you can't get both legs at least 24″ into the ground, consider moving to another location.)

   1st law of kiosk building: The bedrock will always be found in the second hole.

2. Put both legs in their holes.
3. Clamp one end of a 5′ furring strip to the front face of the first leg. Then, with both legs approximately vertical, clamp the other end of the furring strip to the other leg. This will make sure that the fronts of both legs remain in the same plane as you align the first leg.
4. Make the first leg accurately vertical using a good carpenter's level. The leg needs to be vertical left and right as well as front to back. Then use 1″× 3″× 12′ furring strips as braces to hold the leg in position. One brace should be anchored well to the side and the other well to the back of the kiosk. Make sure that the side brace is in the plane of the front of the legs and that the back brace is 90˚ from that.
5. Fit the ridge beam in place between the two legs and use it to level the tops of the legs. Measure any difference and then correct the second leg by filling in its hole or cutting off the bottom of the leg (or deepening the hole) to brings the tops level.
6. Check that the first leg is vertical and aligned in the plane of the front of the legs.
7. Decide on the height of the display panel. Normally bottom of the panel is 3′ above the ground. Clamp a block of wood at this height to the inside of the first leg to support the bottom corner of the MDO panel.

© Copyright, 2010, Finger Lakes Land Trust and Roger A. Hopkins

8. Clamp a temporary support to the bottom edge of the MDO panel on the other side to hold the weight and keep it horizontal. Use a clamp on the first leg at the top of the MDO panel to keep the panel vertical.
9. With the MDO panel snugly against the first leg (and the first leg well aligned) adjust the second leg using the MDO panel as a guide. This will make the second leg vertical left to right. Use your carpenter's level to get the second leg vertical front to back. You may need to move the bottom or the top to prevent twisting the legs out of the desired plane.

Aligning the tops of the legs (left) and squaring the legs using the MDO panel (right)

10. At this point, the legs should be aligned. Clamp the second leg to braces or to the first leg and MDO panel.
11. Then with the legs aligned, adjust the left to right position of the ridge beam and attach it. Then trim the length of the horizontal panel brackets to actual measurement and attach them. Clamp the horizontal panel brackets to the MDO panel to align them.
12. Finally, fill the holes with concrete mix and water. Give the concrete a few minutes to set up before you begin working on the roof, and work carefully so as not to disturb the alignment until the concrete is well set.

    Some people like to pre-mix the concrete and pour it wet into the holes, while others pour the concrete mix in dry and then add water into the hole. Check out the quick-set concrete mix that is formulated for this technique; but be aware that it does set very quickly and you will not have much time to correct any alignment problems.

    Some people prefer rocks, gravel, tightly packed soil, or rock dust rather than concrete to anchor the legs.

© Copyright, 2010, Finger Lakes Land Trust and Roger A. Hopkins

The Roof

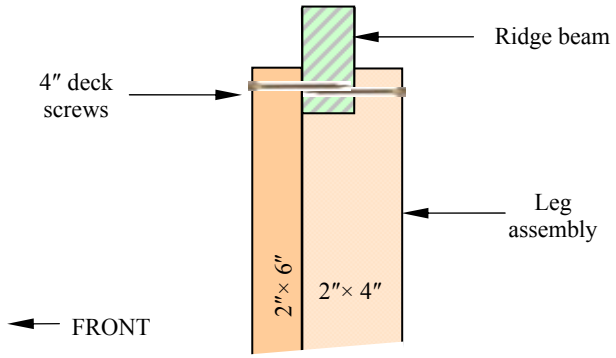

Position the ridge beam in place and secure with 4″ deck screws through the 2″× 6″ member of the leg assembly.

Clamp the rafter support into approximate position on the outside of the leg assembly. Place the front rafter in position and then with a rafter spacer between it and the rafter support, clamp the rafter support, spacer, and rafter together. Then position the back rafter and clamp it to the back of the rafter support along with a rafter spacer. Don't worry about positioning the rafter spacers; the problem of the moment is to get both rafters and the rafter support lined up. Two people are needed for this.

When rafters and the rafter support are aligned, tighten the clamps and then drill the holes for the two carriage bolts and insert and tighten them. Then align the rafter spacers, tighten the clamps there, and then drill the holes for the carriage bolts at the end of the rafter support and insert and tighten them. Finally, put two 4″ deck screws through the top of the rafters into the ridge beam. Note where these screws are so you don't hit them when attaching the roof and the ridge cap.

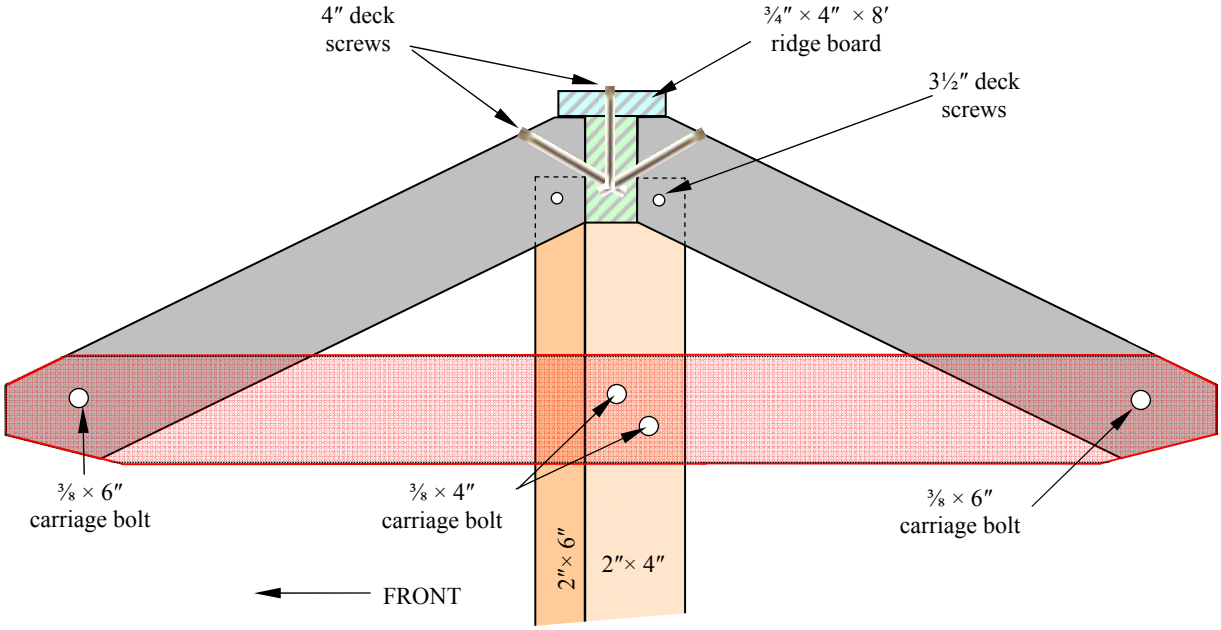

Attach the ridge board to the ridge beam using two 4″ deck screws. Drive the screws between the rafter locations so they don't interfere with the other screws.

© Copyright, 2010, Finger Lakes Land Trust and Roger A. Hopkins

Attach the ¾″ × 4″ × 8′ ridge board by driving several 4″ deck screws down into the ridge beam. Start the roof at the bottom by clamping a roof board to the two rafters. Then drive a 4″ deck screw through the roof board into the rafter. Attach the bottom board to the back rafters in the same way. This will prevent the ends from twisting as you build the roof. Then do a rough layout of the next three roof boards in the front. You want the overlaps to be about the same and the top roof board snug up against the ridge board. Mark the position of the boards and then work from the bottom up by clamping the second board to the two end rafters, and then securing with a 4″ deck screw. Do only second board front and back now. You will do the third and fourth boards front and back after the lazy rafters are in place.

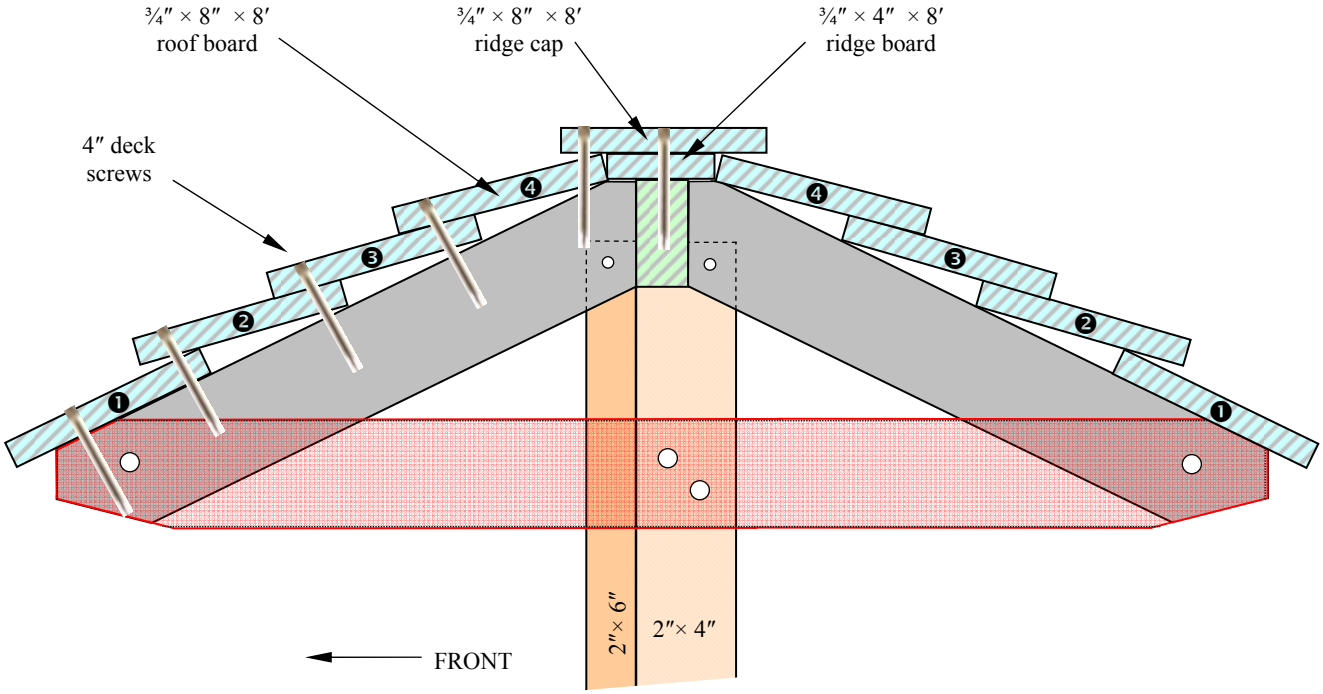

Clamp the lazy rafters to the bottom roof board and align with the ridge beam. Secure the lazy rafter to the ridge beam with a 4″ deck screw. Then with the clamp still in place, drive the 4″ deck screws through the roof boards into the lazy rafter. Repeat for the all of the lazy rafters.

© Copyright, 2010, Finger Lakes Land Trust and Roger A. Hopkins

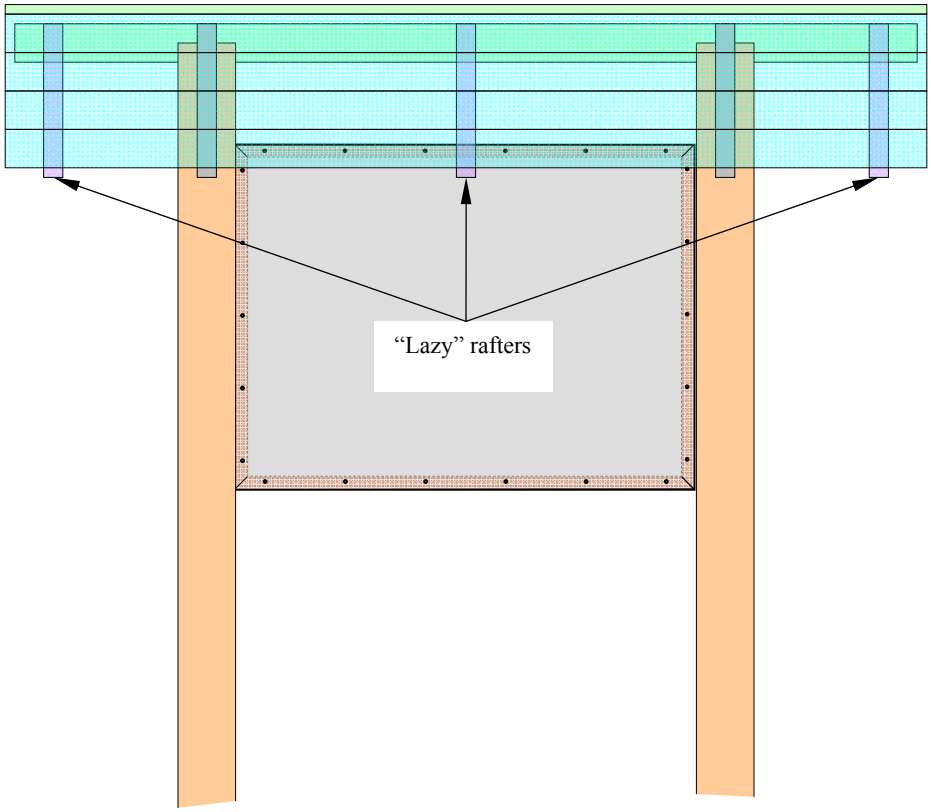

To complete the roof, attach the third and fourth roof boards front and back, and then screw the ridge cap down through the ridge board into the ridge beam. Use five 4″ deck screws along the length of the ridge, offset slightly from the rafters to avoid interfering with the other screws already in place.

Before attaching the ridge cap, consider cutting drip grooves as shown below. We did have a slight problem with water siphoning back under the ridge cap that this should prevent.

© Copyright, 2010, Finger Lakes Land Trust and Roger A. Hopkins

Maintaining the Display panel

You will need to instruct the person responsible for the content of the display panel, and provide them with the proper driver for the trim screws. Here is how to remove the Lexan: Remove all of the screws from the vertical frame piece on the right side of the panel. Remove the frame piece and set it aside with the top end up. Slide the lexan sheet slightly to the right so that it is free from the left side frame piece. Then lift the horizontal center of the Lexan away from the corkboard to buckle the sheet enough to free it from the top frame piece. You can then remove the Lexan sheet and carefully set it aside. Reverse the process after changing the content. An office stapler is probably the best way to attach paper to the cork board. Hopefully, it should not be necessary to laminate the content.

Kadillac Kiosk

The kiosk shown below was professionally designed and was constructed and installed using similar techniques to those described above. The kiosk features two professionally printed panels and a bulletin board display panel (not completed in this photo) for display of changing content. The roof is flat boards, membrane, and cedar shakes. The vertical posts are 6 x 6 black locust.

Kiosk at Roy H. Park Nature Preserve

© Copyright, 2010, Finger Lakes Land Trust and Roger A. Hopkins

Bill of materials

Quantity	Item	Description
2	2″× 6″× 10′	Leg fronts. Should be full 2″× 4″. Should be as straight as possible with 3 good edges for 7½ feet of length. The end to be buried can have defects.
2	2″× 4″× 10′	Leg sides. Same as fronts.
1	2″× 4″× 8′	Ridge beam. This should be straight with square edges.
4	2″× 4″× 24″	Working rafters. Should be full 2″× 4″. Plan on cutting from 8-footers if you can get 3 or 4 good pieces. It helps if these are fairly similar and consistent in width and thickness, with straight, square edges.
6	2″× 4″× 24″	Lazy rafters. Can be same as above, but lighter weight and some variation is OK. Cut from 8-footers.
1	1″× 4″× 8′	Ridge board. This should be straight with square edges.
9	¾″× 8″× 8′	Roof boards. If possible, get these cut to order rather than using full one-inch thick rough cut. This will reduce the weight of the roof. There can be some imperfections on the edges since there is 1½″ - 2″ of overlap. But there should be no holes in the middle. Some warp is OK since these will be screwed down, but the edges should be fairly straight. There can also be some variation in width as long as you plan for it. Save the best ones for the ridge cap and the bottom front.
2	2″× 4″× 5′	Horizontal display brackets. These are out of sight in the back and can have some imperfection. Square one end in the shop and then cut to exact length during assembly.
2	1″ × 6″ × 30″	Vertical display brackets. These are out of sight in the back and can have some imperfection. Square one end in the shop and then cut to exact length during assembly.
2	1″× 2″× 8′	Display frame. You will rip these to 1½″ and resaw to ¾″ thick and then cut 48″and 36″ pieces. These want to be straight and uniform so you end up with a nice looking frame to hold the Lexan. If you find a single nice 1″× 4″× 8′ you could use that instead.
1	48″× 36″ MDO Plywood	This is waterproof, but it wouldn't hurt to paint the back side.
1	48″× 36″ corkboard Homosote	Keep this protected until final assembly.
1	45½″× 33½″× ⅛″ Lexan	There are two inferior grades between Lexan and "plexigrass" which might work, but Lexan is preferred for strength (pretty much unbreakable) and no discoloration.
12	5/16″× 5″ galvanized lag screw	For attaching the front and side members of the leg assemblies. Comparable structural screws could be used.
4	⅜ × 4″ galvanized	Attach rafter support to legs, two at each end.

© Copyright, 2010, Finger Lakes Land Trust and Roger A. Hopkins

Quantity	Item	Description
	carriage bolt	
4	⅜ × 6″ galvanized carriage bolt	Attach end of rafter support, through rafter spacer to rafter ends.
8	2½″ deck screws	Attach vertical panel brackets from back into 2 x 6 leg fronts. 8 are needed.
20	3½″ deck screws	Attach top of rafters to leg assemblies, one through front rafter into 2 x 6 and one through back rafter into 2 x 4. 4 needed Attach horizontal panel brackets from back into 2 x 6 leg fronts. 16 are needed.
59	4″ deck screws	Attach ridge beam to leg assemblies, one through 2 x 6 into front of ridge beam and one through 2 x 4 into back of ridge beam. 4 needed. Attach ridge board to ridge beam. 2 needed. Attach roof boards to rafters. 50 are needed. Attach ridge cap through ridge board into ridge beam. 5 are needed
22	2½″ stainless trim screws	Attach frame though Homosote and MDO plywood to 1 x 6 vertical bracket on sides and 2 x 4 horizontal brackets top and bottom.
3-4	40 lb. concrete mix	Consider the quick-setting mix.

Roger Hopkins
roger@naturalhighs.net

Sweedler: Thanks to Betsy Darlington (inspiration), Tom Brown (black locust), Dave Schurman (clamps, garage, and advice), Gary Mallow (encouragement & sweat), Will Hopkins (concrete & counsel), Carl Leopold (appreciation)

Kingsbury: Thanks to Chris Olney (make it happen), Sheila Kingsbury (site), Tom Brown (black locust), Dennis Baldwin (Eagle Scout in waiting) and comrades, Baldwin/Costich family (pizza, transportation, impossibly tall and heavy step ladder, immeasurable help)

© Copyright, 2010, Finger Lakes Land Trust and Roger A. Hopkins